MANUAL SUPPLEMENT

8410C NETWORK ANALYZER

USE THIS SUPPLEMENT WITH
MANUAL PART NO. 08410-90521
PRINTED: JUNE 1979

HEWLETT PACKARD

CERTIFICATION

Hewlett-Packard Company certifies that this product met its published specifications at the time of shipment from the factory. Hewlett-Packard further certifies that its calibration measurements are traceable to the United States National Bureau of Standards, to the extent allowed by the Bureau's calibration facility, and to the calibration facilities of other International Standards Organization members.

WARRANTY

This Hewlett-Packard instrument product is warranted against defects in material and workmanship for a period of one year from date of shipment. During the warranty period, Hewlett-Packard Company will, at its option, either repair or replace products which prove to be defective.

For warranty service or repair, this product must be returned to a service facility designated by HP. Buyer shall prepay shipping charges to HP and HP shall pay shipping charges to return the product to Buyer. However, Buyer shall pay all shipping charges, duties, and taxes for products returned to HP from another country.

HP warrants that its software and firmware designated by HP for use with an instrument will execute its programming instructions when properly installed on that instrument. HP does not warrant that the operation of the instrument, or software, or firmware will be uninterrupted or error free.

LIMITATION OF WARRANTY

The foregoing warranty shall not apply to defects resulting from improper or inadequate maintenance by Buyer, Buyer-supplied software or interfacing, unauthorized modification or misuse, operation outside of the environmental specifications for the product, or improper site preparation or maintenance.

NO OTHER WARRANTY IS EXPRESSED OR IMPLIED. HP SPECIFICALLY DISCLAIMS THE IMPLIED WARRANTIES OF MERCHANTABILITY AND FITNESS FOR A PARTICULAR PURPOSE.

EXCLUSIVE REMEDIES

THE REMEDIES PROVIDED HEREIN ARE BUYER'S SOLE AND EXCLUSIVE REMEDIES. HP SHALL NOT BE LIABLE FOR ANY DIRECT, INDIRECT, SPECIAL, INCIDENTAL, OR CONSEQUENTIAL DAMAGES, WHETHER BASED ON CONTRACT, TORT, OR ANY OTHER LEGAL THEORY.

ASSISTANCE

Product maintenance agreements and other customer assistance agreements are available for Hewlett-Packard products.

For any assistance, contact your nearest Hewlett-Packard Sales and Service Office. Addresses are provided at the back of this manual.

MANUAL CHANGES

MANUAL IDENTIFICATION
Model Number: 8410C
Date Printed: March 1982
Part Number: 08410-92019

This supplement contains important information for correcting manual errors and for adapting the manual to instruments containing improvements made after the printing of the manual.

To use this supplement, make all ERRATA corrections and all appropriate serial number related changes indicated in the tables below.

SERIAL PREFIX OR NUMBER	MAKE MANUAL CHANGES
2310A	1

SERIAL PREFIX OR NUMBER	MAKE MANUAL CHANGES

► NEW ITEM

ERRATA

Page 5, Table 1:
Change W1 to HP Part Number 08410-60150.
Change W3 to HP Part Number 08410-60151.

►CHANGE 1

Page 5, Table 1:
Delete MP1 (Adapter-Coax Tee)

NOTE

Manual change supplements are revised as often as necessary to keep manuals as current and accurate as possible. Hewlett-Packard recommends that you periodically request the latest edition of this supplement. Free copies are available from all HP offices. When requesting copies, quote the manual identification information from your supplement, or the model number and print date from the title page of the manual.

Printed in U.S.A.

20 JANUARY 1983
1 page

HEWLETT PACKARD

MODEL 8410C
NETWORK ANALYZER

SERIAL NUMBERS

This manual applies directly to HP Model 8410C Network Analyzer having serial number prefix 2138A.

For additional information about serial numbers, refer to INSTRUMENTS COVERED BY MANUAL in Section I of the 8410B Manual.

MANUAL PART NO. 08410-92019
Microfiche Part No. 08410-92020

Printed: MARCH 1982

HEWLETT PACKARD

SAFETY CONSIDERATIONS

GENERAL

This product and related documentation must be reviewed for familiarization with safety markings and instructions before operation. This product has been designed and tested in accordance with international standards.

SAFETY SYMBOLS

⚠ Instruction manual symbol: the product will be marked with this symbol when it is necessary for the user to refer to the instruction manual (refer to Table of Contents).

Indicates hazardous voltages.

Indicates earth (ground) terminal.

WARNING The WARNING sign denotes a hazard. It calls attention to a procedure, practice, or the like, which, if not correctly performed or adhered to, could result in personal injury. Do not proceed beyond a WARNING sign until the indicated conditions are fully understood and met.

CAUTION The CAUTION sign denotes a hazard. It calls attention to an operating procedure, practice, or the like, which, if not correctly performed or adhered to, could result in damage to or destruction of part or all of the product. Do not proceed beyond a CAUTION sign until the indicated conditions are fully understood and met.

SAFETY EARTH GROUND

This is a Safety Class I product (provided with a protective earthing terminal). An uninterruptible safety earth ground must be provided from the main power source to the product input wiring terminals, power cord, or supplied power cord set. Whenever it is likely that the protection has been impaired, the product must be made inoperative and be secured against any unintended operation.

BEFORE APPLYING POWER

Verify that the product is configured to match the available main power source per the input power configuration instructions provided in this manual.

If this product is to be energized via an autotransformer, make sure the common terminal is connected to the neutral (grounded) side of mains supply.

SERVICING

WARNING

Any servicing, adjustment, maintenance, or repair of this product must be performed only by qualified personnel.

Adjustments described in this manual may be performed with power supplied to the product while protective covers are removed. Energy available at many points may, if contacted, result in personal injury.

Capacitors inside this product may still be charged even when disconnected from its power source.

To avoid a fire hazard, only fuses with the required current rating and of the specified type (normal blow, time delay, etc.) are to be used for replacement.

THE 8410C MANUAL SUPPLEMENT TO THE 8410B OPERATING AND SERVICE MANUAL

Introduction

This 8410C Manual Supplement, when used with an HP 8410B Operating and Service Manual (HP Part Number 08410-90521), will fully document the HP Model 8410C Network Analyzer.

The Model 8410C has all of the standard features that were previously available in the Model 8410B. As well, the Model 8410C now includes the Model 8410B Option H17 (external phase lock capability) and Option C06 (rear panel 8411A input) in its design. The purpose of these changes was to give the Model 8410C the capability of being used directly in a system that: uses a synthesized frequency source in place of the Model 8411A's VTO, and, has a phase locked loop error correction signal for improved RF sweep oscillator stability.

The major improvements to the 8410C that are documented in this supplement are summarized below.

- External phase lock capability for the RF swept signal source has been added through the use of a single front panel ϕ LOCK – NORMAL toggle switch (previously 8410B Option H17).
- The Reference Channel first IF frequency (from the 8411A) has been routed to a rear panel BNC output labeled "IF OUTPUT".
- The 8411A INPUT to the 8410C has been moved from the front panel to the rear panel (previously 8410B Option C06).
- The Model 8410C now has improved phase lock tracking capability at high RF input frequencies.
- The output power level of the IF output signal has been reduced from the previous Model 8410B Option H17 level in order to improve the system's capability to phase lock on the desired input signal from the RF source.

How to Use This Supplement

The 8410C changes previously listed are fully documented in this supplement through the use of replacement figures, partial or full schematic and block diagrams, and specific references to text modifications. These changes to the existing 8410B Operating and Service Manual are listed in a section-by-section order to make the modifications to the manual as simple as possible.

It is important to note that the 8410B Operating and Service Manual, with its current (yellow) Manual Changes supplement may still be used to document earlier versions of the 8410B Network Analyzer. It is the scope of this 8410C Manual Supplement to specifically document only the major modifications to the 8410B which make it an 8410C. Keep in mind when using this supplement with the 8410B manual that no attempt has been made to change each and every individual entry in the 8410B manual which relates to the 8410C.

To revise the 8410B Operating and Service Manual (HP Part Number 08410-90521) to document the 8410C Network Analyzer, make the following changes as described in each entry:

General

1. Make all ERRATA and CHANGE item changes listed in the latest available 8410B/8411A (yellow) Manual Changes Supplement pertaining to 8410B/8411A Operating and Service Manual having HP Part Number 08410-90521.
2. Throughout the manual, change all "8410B Network Analyzer" references to "8410C Network Analyzer".
3. Note that all front and rear panel views used in equipment setup diagrams must be modified to show the INPUT (from 8411A) connector on the rear panel and the addition of the front panel "SOURCE" switch.
4. All procedures, tests, and troubleshooting in the existing 8410B manual still apply to the 8410C when the SOURCE switch is in the NORMAL position.
5. No modifications have been made to the 8411A Harmonic Frequency Converter or any documentation relating to it.

Section I, General Informtion

Page 1-0, Figure 1-1:

Modify the 8410B and 8411A photo to show the transfer of the front panel INPUT connector to the rear panel and the addition of the front panel SOURCE control switch. (Refer to Figures 3-1 and 3-2 in this supplement.)

Delete the Source Control Cable.

Add HP 11170B, BNC Cable, 61 cm (24 in.) (Not Shown).

Add Service Accessory Extender Board, HP Part Number 08410-60109 (Not Shown).

Page 1-1:

Add the following paragraphs to the existing **DESCRIPTION**.

The 8410C Network Analyzer has the capability of being used in a system that uses a synthesized frequency source in place of the 8411A's internal VTO, and that has a phase locked loop error correction signal for RF sweep oscillator stability.

External phase lock capability is built in. A switch, labeled "SOURCE", on front panel of the 8410C allows the user to select one of two positions, "NORMAL" or "ϕ LOCK". When in the "NORMAL" position, the 8410C internal phase lock circuitry and the Model 8411A VTO are used. When CW measurements are being made, the SOURCE switch can be set to the "ϕ LOCK" position. The 8410C internal phase lock circuits are then bypassed and an external synthesized frequency source (input at the 8410C rear panel) is used as the signal source for the 8411A samplers. The 8411A internal VTO is disabled during this time.

The 20.278 MHz Reference Channel IF signal (from the 8411A) is routed to a rear panel BNC output labeled "IF OUTPUT". This IF signal output is then connected to an HP 8709 Synchronizer where it is compared to an internal oscillator in the 8709 (using circuitry similar to the Model 8410C phase lock circuitry). The frequency reference crystal used in the Model 8709 is the same type as that used in the Model 8410C in order to minimize the frequency difference between the two. The difference between the input signal to the Model 8709 and its internal reference oscillator results in an error correction signal that is then connected to the FM INPUT of the swept signal source being used. In this manner, the RF signal is phase locked to an accurate CW source (synthesizer) rather than phase locking the Model 8411A VTO to the RF source.

Additional information on 8410-based Network Analyzer systems is available in the HP 8409B/C Automatic Network Analyzer documentation. As well as phase locking information, additional information on system error correction through the use of a system controller and available software is also supplied.

Page 1-4:
Change Paragraph 1-21 to say:

1-21. A detachable power cable, a 61 cm (24 in.) BNC cable, a service extender cable, and a service extender board are supplied with the Model 8410C. No accessories are included with the Model 8411A.

Delete Paragraphs 1-22 and 1-23.

Page 1-5:
Change Paragraphs 1-29 and 1-30 to say:

1-29. Source Control Cable

1-30. A Source Control Interconnect Cable is necessary for automatic multi-octave operation of the HP 8620A/C or HP 8350A Sweep Oscillator with the 8410C. The correct cable for the 8620A is HP Part Number 08410-60115. The correct cable for the 8620C is HP Part Number 8120-2208. The 8620C Source Control Cable is also available with the 8410C as Option 820. The correct cable for the 8350A is 08410-60146. The 8350A Source Control Cable is also available with the 8410C as Option 850. Each of these cables may be ordered through the nearest Hewlett-Packard office. A listing of HP Sales/Service offices may be found at the end of this manual.

Page 1-9:
Add the following to Paragraph 1-75:

Frequency stability of the RF signal source in CW mode can be greatly improved though the use of a phase locked loop error correction system using the HP 8709B Synchronizer and a very accurate frequency source (such as the HP Model 3335 Frequency Synthesizer). The frequency synthesizer is used in place of the internal 8411A VTO. In addition to improving overall frequency accuracy, this configuration eliminates measurement errors due to harmonic skipping.

Section II, Installation

Installation instructions for the Model 8410C Network Analyzer are the same as for the 8410B except for the connections required to use the added capabilities of the external phase lock features. Detailed information on externally phase locked 8410-based network analyzer systems may be found in the HP 8409C Automatic Network Analyzer Operating and Service Manual.

Section III, Operation

Page 3-2:
Replace the existing Figure 3-1 Front Panel Features diagram with the new Figure 3-1 supplied in this supplement.

Page 3-4:
Replace the existing Figure 3-2 Model 8410B Rear Panel Features diagram with the new Figure 3-2 supplied in this supplement.

Section IV, Performance Tests

Since there are no specification changes to the 8410C from the previous 8410B, no additional Performance Tests are supplied. If an operation verification of the 8410C is needed to verify that the circuit changes made to the 8410C (from the 8410B) are operating properly, refer to the information presented in Section VIII, Service, in this manual supplement. General operating voltage and signal levels are available there for the purpose of troubleshooting information. These voltages and signal levels may be verified at the rear panel BNC and SOURCE CONTROL connectors without removing any covers from the instrument.

In order to fully exercise the external phase locking operation of the 8410C, it must be installed in a system configuration with a fully operational phase lock loop error correction signal being developed for the RF swept signal source.

Section V, Adjustments

No additional adjustments are necessary in the 8410C that were not previously required for the 8410B.

Section VI, Replaceable Parts

The information supplied in Table 1 of this manual supplement will modify the 8410B replaceable parts information so that it can accurately document all 8410C replaceable parts. Follow the Page and Figure/Table references given (in Table 1) and modify the existing entries as indicated by the required Action.

No changes are necessary to the 8411A replaceable parts listings.

Table 1. 8410C Replaceable Parts Changes

Page	Figure/Table	Action	Ref. Desig.	HP Part No.	CD	Qty.	Description
6-8	Table 6-3	Change	A7R8	0698-3450	9	1	RESISTOR 42.2K 1% .125W F TC=0±100
6-16	Table 6-3	Change	A15R32*	0757-0459	8	1	RESISTOR 56.2K 1% .125W F TC=±100
6-18	Table 6-3	Change	A17	08410-60145	8	1	BOARD ASSEMBLY, REMOTE INTERFACE
6-18	Table 6-3	Add	A17C1	0160-3451	1	1	CAPACITOR-FXD .01UF +80−20% 100VDC CER
6-18	Table 6-3	Add	A17C2	0160-3451	1	1	CAPACITOR-FXD .01UF +80−20% 100VDC CER
6-18	Table 6-3	Add	A17J1-4	1250-0835	1	1	CONNECTOR RF SMC M PC 50-OHM
6-18	Table 6-3	Add	A17R1	0757-0280	3	1	RESISTOR 1K 1% .125W F TC=0±100
6-18	Table 6-3	Add	A17R2	0757-0418	9	1	RESISTOR 619 1% .125W F TC=0±100
6-18	Table 6-3	Add	A17R3	0757-0394	0	1	RESISTOR 51.1 1% .125W F TC=0±100
6-18	Table 6-3	Add	A17R4	0757-1094	9	1	RESISTOR 1470 1% .125W F TC=0±100
6-21	Table 6-3	Add	CR1	1901-0050	3	1	DIODE-SWITCHING 80V 200MA 2NS DO-35
6-22	Table 6-3	Change	J18	1250-0083	1	1	CONNECTOR RF BNC FEM SGL-HOLE-FR 50-OHM
6-22	Table 6-3	Add	J19	1250-0102	5	1	CONNECTOR RF BNC FEM SGL-HOLE-FR 50-OHM
6-22	Table 6-3	Add	J20	1250-0102	5	1	CONNECTOR RF BNC FEM SGL-HOLE-FR 50-OHM
6-22	Table 6-3	Add	J21	1250-0083	1	1	CONNECTOR RF BNC FEM SGL-HOLE-FR 50-OHM
6-22	Table 6-3	Add	J22	1250-0083	1	1	CONNECTOR RF BNC FEM SGL-HOLE-FR 50-OHM
6-22	Table 6-3	Add	MP1	1250-0838	4	1	ADAPTER-COAX TEE F-SMC M-SMC M-SMC
6-22	Table 6-3	Add	S2	3100-1619	6	1	SWITCH (SOURCE)
6-22	Table 6-3	Change	W1	08410-60135	6	1	CABLE ASSEMBLY, REFERENCE
6-22	Table 6-3	Change	W2	08410-60132	3	1	CABLE ASSEMBLY, 20.278 MHZ IF
6-22	Table 6-3	Change	W3	08410-60136	7	1	CABLE ASSEMBLY, TEST
6-22	Table 6-3	Add	W17	0841060129	8	1	CABLE ASSEMBLY, RF, VTO
6-22	Table 6-3	Add	W18	08410-60128	7	1	CABLE ASSEMBLY, 20.278 MHZ IF (TO A17)
6-22	Table 6-3	Add	W19	08410-60126	5	1	CABLE ASSEMBLY, SYNTHESIZER IN (TO A17)
6-22	Table 6-3	Add	W20	08410-60127	6	1	CABLE ASSEMBLY, IF OUTPUT (FROM A17)
6-24	Fig. 6-1	Change	4	08410-00074	6	1	COVER, REAR PANEL
6-25	Fig. 6-2	Change	2	7121-2568	4	1	PLATE, IDENTIFICATION
6-25	Fig. 6-2	Change	4	08410-00075	7	1	PANEL, FRONT

Section VII, Manual Changes

The information given in the Manual Changes section of the 8410B manual still applies to all previous Model 8410B instruments as indicated, however, none of this information is applicable to the newer Model 8410C Network Analyzer. Only the information in this supplement and the (yellow) Manual Changes supplement for the 8410B Operating and Service Manual (HP Part Number 08410-90521) are required for complete documentation of the Model 8410C.

Section VIII, Service

Page 8-1:
Change Paragraph 8-10 to say:

> 8-10. A circuit board extender (HP Part Number 08410-60109) is supplied with the 8410C and is shipped separately. The extender raises boards clear of the chassis for easier access to the test points. It is designed to work with either 12 or 15 pin circuit boards used in the 8410C.

Page 8-27:
Add the following note below the existing Figure 8-14.

NOTE

This Basic Block Diagram represents instrument operation when the 8410C front panel SOURCE switch is in the NORMAL position. Refer to the Detail Block Diagram for alterations to the existing signal paths when the SOURCE switch is in the ϕ LOCK position.

Page 8-28:
Replace the existing Figure 8-15 (1 of 2) and (2 of 2) with the new Model 8410C Test Points diagrams, Figure 8-15 (1 of 2) and (2 of 2), supplied in this supplement. These diagrams show the position of the new A17 Remote Interface Board Assembly in the top view (1 of 2) and the position of the rear panel INPUT connector in the bottom view (2 of 2).

Page 8-29:
Replace the existing Figure 8-17 with the new Figure 8-17, Detailed Block Diagram, supplied in this supplement. This replacement block diagram shows the implementation of the new A17 Remote Interface Board Assembly and the addition of the SOURCE switch (ϕ LOCK – NORMAL).

Page 8-41, Service Sheet 4:
Insert the partial schematic diagram supplied in this supplement at the left side of schematic diagram Figure 8-36, 8410C-A12 and A14 Schematic Diagram. The new partial schematic indicates the changes to the REFERENCE CHANNEL input signal configuration with the addition of MP1 (tee).

Page 8-47, Figure 8-45:
Change A15R32 to A15R32* 56.2 Kohms.

Page 8-54:
Add the following paragraph to the existing A7 Circuit Description:

SWITCHING DIODE CR1 OPERATION

The frequency reference (FREQ REF) signal from the RF sweep oscillator is summed into the 8410C A7 VTO-DC Amplifier Assembly (at XA7 pin 13) when the SWEEP STABILITY control is in the fully counter-clockwise position (detent position). This voltage, input at the rear panel FREQ REF INPUT BNC connector, is proportional to sweep oscillator frequency (1 volt/GHz). This forces the 8411A VTO to tune to a higher frequency, thereby causing the sampler to operate at a lower harmonic number. The net effect is to force the Sampler to use a VTO range where the Sampler efficiency is better. Due to the voltage normally present at the cathode of CR1, this will not take effect until CR1 becomes forward biased (8410C operation above approximately 11 GHz).

Page 8-55, Service Sheet 11:
Replace the existing Service Sheet 11 with the one supplied in this supplement, Figure 8-57, 8410C-A7 and A8 Schematic Diagram. The replacement Service Sheet 11 shows the addition of CR1 at the top of the schematic, the addition of the SOURCE switch in the center, and corrections to the SWEEP STABILITY switch at the right side.

Page 8-63, Service Sheet 14:
Insert the partial schematic diagram supplied in this supplement at the right side of schematic diagram Figure 8-64, 8410C-A9 Schematic Diagram. This partial schematic diagram indicates the insertion of the SOURCE switch in the STOP SWEEP output signal path.

Page 8-64:
Add the following paragraph to the existing A18 Circuit Description:

SWITCHING DIODE CR1 OPERATION

The frequency reference (FREQ REF) signal from the RF sweep oscillator is summed into the 8410C A7 VTO-DC Amplifier Assembly (at XA7 pin 13) when the SWEEP STABILITY control is in the fully counter-clockwise position (detent position). This voltage, input at the rear panel FREQ REF INPUT BNC connector, is proportional to sweep oscillator frequency (1 volt/GHz). This forces the 8411A VTO to tune to a higher frequency, thereby causing the sampler to operate at a lower harmonic number. The net effect is to force the Sampler to use a VTO range where the Sampler efficiency is better. Due to the voltage normally present at the cathode of CR1, this will not take effect until CR1 becomes forward biased (8410C operation above approximately 11 GHz).

Page 8-65, Service Sheet 15:
Add switching diode CR1 at the left side of Figure 8-66, 8410C-A18 Schematic Diagram. CR1 is connected to connector XA18 between pin 11 (anode, shown) and pin N (cathode, not shown). XA18 pin N has no connection to the A18 circuit assembly. The cathode of CR1 is connected through a white-violet-grey (978) wire to the SWEEP STABILITY switch A1S2 at the pin which also has A1R28 connected to it.

In this manner, the Frequency Reference Input from the 8410C rear panel will also go to A7 pin 13 when the SWEEP STABILITY switch is in the fully counter-clockwise (detent) position. This is clearly illustrated in detail on the partial schematic diagram for Figure 8-57, supplied in this supplement.

Page 8-69/8-70, Service Sheet 17:

Modify the following portions of Figure 8-69, 8410C Signal Wiring Diagram.

On the lower left corner of the schematic, modify the SWEEP REF INPUT and Front Panel A1S2 switch portion of the schematic by adding CR1 and its connection to the XA18 connector. This is clearly illustrated at the top of the new Figure 8-57, Service Sheet 11, supplied in this supplement.

On the right side of the schematic, add the SOURCE switch in the STOP SWEEP line. This is clearly illustrated in the new Figure 8-71, Service Sheet 18, supplied in this supplement.

Page 8-70:

Insert the following **8410C REMOTE INTERFACE BOARD ASSEMBLY A17 CIRCUIT DESCRIPTION.**

8410C REMOTE INTERFACE BOARD ASSEMBLY A17 CIRCUIT DESCRIPTION

The A17 board provides the necessary control and signal interface lines to the 8410C from the rear panel BNC connections for use with the 8410C in a system configuration.

On the A17 board, R3 and R4 decrease the Reference Channel 20.278 MHz IF frequency signal level for use by the HP 8709 Synchronizer. The SYNTH IN connector accepts a signal from a synthesized frequency source (such as the HP 3335 Frequency Synthesizer). When the 8410C front panel SOURCE control switch is in the ϕ LOCK position, this signal is ac coupled through C2 to the 8411A VTO Assembly. Switching R2 to −20V allows a steering diode in the 8411A (8411A-A7CR6) to turn on, thereby injecting the synthesizer input to the 8411A Power Amplifier in place of the 8411A VTO. The 8411A VTO is disabled during this time with A17R1 switched to +20V. This puts approximately +10 volts on XA17 pin 3, causing 8411A A7CR5 to turn on. This, in turn, disables the 8411A VTO.

Additional operations are also provided by the SOURCE switch. When in the ϕ LOCK position, the rear panel SWITCH SENSE line is grounded. (The SWITCH SENSE line is used by the Model 11859A Amplifier Switch in a system configuration.) When in the NORMAL position, the SOURCE CONTROL output from the A9 Automatic Control Assembly is disconnected from the rear panel connector. The rear panel BLANK output and the display plug-in connector (J2) BLANKING line receive their signal input from the A8 Search Assembly when in NORMAL and from the HP 8709 Synchronizer when in ϕ LOCK.

Page 8-70:

Insert the new Figure 8-70, 8410C-A17 Parts Location, supplied in this supplement.

Insert the new Service Sheet 18, 8410C-A17 Schematic Diagram, supplied in this supplement.

Insert the new Figure 8-72, Plug-in Interconnect (J2) Signal Pin Configuration, supplied in this supplement.

FRONT PANEL FEATURES

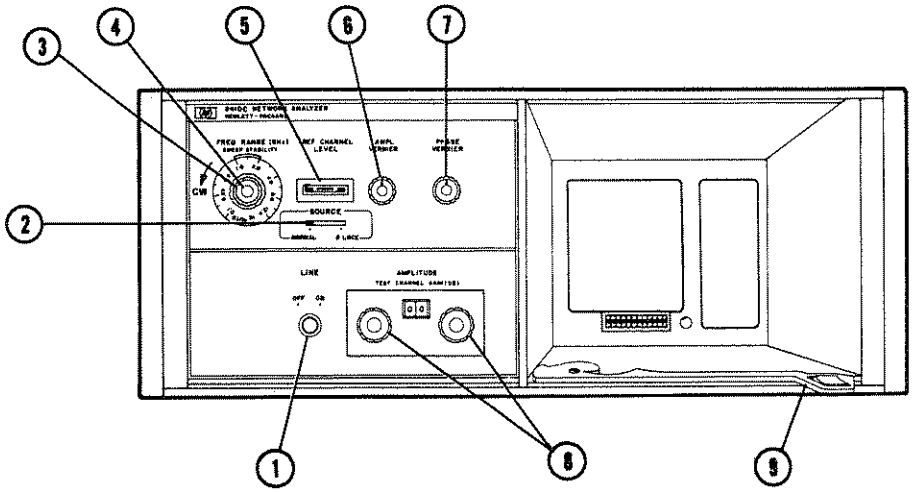

(1) **LINE.** Combination line power switch and power indicator. Pushbutton glows when instrument is ON. Pushbutton retainer pulls out for lamp replacement (Paragraph 2-40).

(2) **SOURCE Selection Switch.** In "NORMAL" position, the 8410C internal phase lock circuitry and the 8411A VTO are used. In "ϕ LOCK" position, the 8410C internal phase lock circuits are bypassed and an external synthesized frequency source (input at the rear panel) is used as the signal source for the 8411A samplers. The 8411A VTO is disabled in "ϕ LOCK".

(3) **FREQ RANGE (GHz).** Automatic or manual frequency range selection control. In AUTO position, the 8410C monitors the source through the Source Interconnect Cable and automatically selects the proper frequency range. Particular frequency ranges can be selected. Selected range must include the frequency (of frequencies) at which measurements are to be made. The dial is marked to indicate that an 8411A Option 018 is required for frequency ranges above 12.4 GHz.

(4) **SWEEP STABILITY.** Fine tuning control. Adjusts for best automatic tuning. A CW detent at the fully counter-clockwise position gives best auto-tuning for single frequency CW mode operation. For swept measurements, this control is typically set to the 1 o'clock position.

(5) **REF CHANNEL LEVEL.** Meter indicates amplitude of signal applied to Model 8411A reference channel input. Pointer should indicate in the OPERATE region for all phase and magnitude measurements. Because the meter averages in RF power during the automatic relocking cycle and sweeper retrace, the meter level should be set with a slow sweep rate.

(6) **AMPLITUDE VERNIER.** Uncalibrated test channel gain vernier with at least 2 dB continuous range. Gain increases with clockwise rotation.

(7) **PHASE VERNIER.** Continuous control for changing relative phase of reference and test channel signals. Range is at least 90°, uncalibrated.

(8) **AMPLITUDE.** Precision 69 dB test channel gain control. Left hand control has 0 to 60 dB range in 10 dB steps. Right hand control has 0 to 9 dB range in 1 dB steps.

(9) **Pivoting Lever.** Installs, retains, and extracts plug-in diplay units.

Replacement Figure 3-1. Model 8410C Front Panel Features

REAR PANEL FEATURES

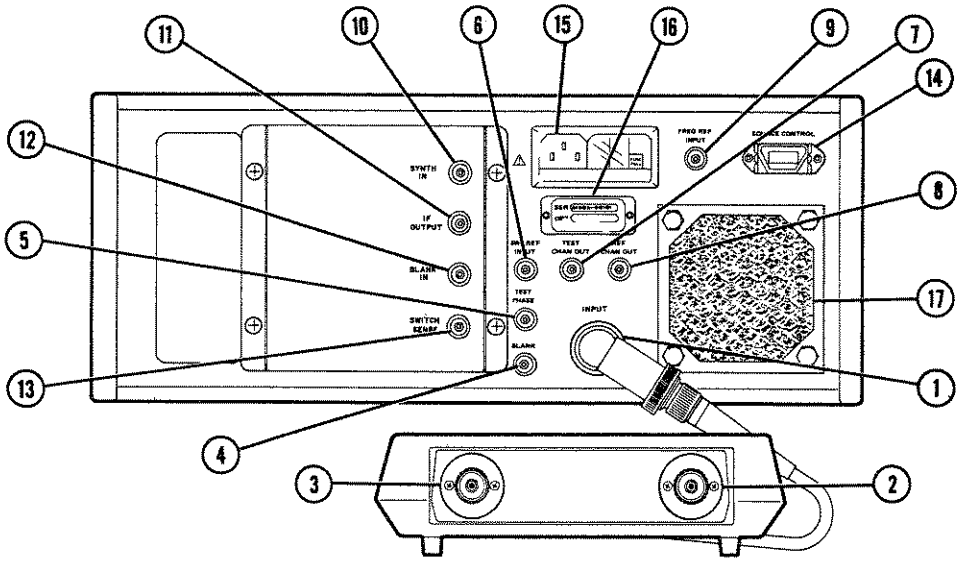

(1) **INPUT.** This 8410C connector mates with the 8411A Harmonic Frequency Converter cable.

(2) **REFERENCE.** Reference channel input.

Impedance: 50 Ohms
Freq. Range*: 0.11 to 12.4 GHz
(Option 018: 0.11 to 18 Ghz)

Internal auto-tuning tunes and tracks REFERENCE and TEST channel inputs to the frequency of the REFERENCE input. Required input levels lie in a range between −18 and −35 dBm (up to 12.4 GHz) and −18 to −25 dBm (from 12.4 to 18 GHz for Option 018). Input power is in this range when the REF CHANNEL LEVEL meter indicates in the OPERATE region. Connector is Precision APC-7**.

(3) **TEST.** Test channel input.

Impedance: 50 Ohms
Freq. Range*: 0.11 to 12.4 GHz
(Option 018: 0.11 to 18 GHz)
Input Power: −10 dBm maximum
(Not to exceed reference channel power by more than 20 dB.)
Dynamic Range: At least 60 dB.

This port admits frequency to which reference channel is tuned. Connector is Precision APC-7**.

(4) **BLANK.** Provides a −2 to −4 volt blanking signal when the 8410C is not phase locked and a −17 to −19 volt signal when phase locked. This blanking signal may be used with an auxiliary display unit.

(5) **TEST PHASE.** 278 kHz sine wave with amplitude fixed at about 0.22 volts p-p. Signal is in phase with test channel input.

(6) **SWP REF INPUT.** Accepts a voltage proportional to reference channel input frequency for single octave sweeps. Voltage enables auto-tuning to track fast sweeping input frequencies. Nominal 0 to +40 volts per octave from 20 KOhms ± 20% source impedance required. The lower voltage must coincide with the lowest input frequency. HP 8690 Sweep Oscillators furnish suitable reference voltages. SWP REF INPUT is not used with HP 8620- and 8350-series Sweep Oscillators.

(7) **TEST CHAN OUT.** 278 kHz sine wave output. Amplitude depends on the amplitude of the test channel RF input and the settings of the front panel TEST CHANNEL GAIN (dB) and AMPL VERNIER controls. Amplitude range is 0 to about 10 volts p-p.

(8) **REF CHAN OUT.** 278 kHz sine wave with amplitude fixed at about 2 volts p-p nominal when REF CHANNEL LEVEL meter indicates in the OPERATE region.

Replacement Figure 3-2. Model 8410C Rear Panel Features (1 of 2)

(9) **FREQ REF INPUT.** Accepts a voltage proportional to reference channel input frequency (1 V/GHz). Voltage is used in AUTO mode operation. FREQ REF INPUT is supplied by the RF section of the HP 8620 or HP 8350 Sweep Oscillator.

(10) **SYNTH IN.** Accepts an external synthesized frequency source (such as the HP 3335 Frequency Synthesizer). This is injected into the 8411A as the VTO oscillator (when the front panel SOURCE switch is in the ϕ LOCK position).

(11) **IF OUTPUT.** Provides rear panel BNC output for the reference channel IF frequency (20.278 MHz). This signal is used in the HP 8709 Synchronizer for phase locking the 8411A VTO to an external synthesized frequency source (when the front panel SOURCE switch is in the ϕ LOCK position).

(12) **BLANK IN.** Allows an external blanking signal (from the HP 8709 Synchronizer) to control the display blanking (when the front panel SOURCE switch is in the ϕ LOCK position).

(13) **SWITCH SENSE.** Senses the position of the front panel SOURCE switch (ground when in ϕ LOCK, open circuit when in NORMAL). Used by the Model 11859A Amplifier Switch in a system configuration.

(14) **SOURCE CONTROL.** For use when operated with the HP 8620 or HP 8350 Sweep Oscillator. Connector is used with the appropriate Source Control Cable to provide interconnection of the Stop Sweep and External Trigger between the sweep oscillator and the 8410C to allow multi-octave sweeps.

(15) **Power Line Module and Fuse.** Allows selection of 100, 120, 220, or 240 Vac operation. To change input line voltage selector, power line cord must be removed from the rear of the instrument. This allows a plastic window covering the fuse compartment to slide aside, exposing the fuse and line selection card. To change fuses or line voltage selection, pull outward on the lever in the fuse compartment.

(16) **SERIAL NUMBER Plate.** This ten digit instrument serial number must be referenced in any correspondence concerning the 8410C.

(17) **Air Intake Filter.** Clean this filter regularly. Do not obstruct the airflow.

CAUTIONS

8411A INPUT

Maximum Input Power: 50 mW (Damage Level)

Maximum dc on RF line: ±3 volts (Damage level).

Static Discharge: Static Charge on cables being connected to the input can damage the 8411A.

Do not twist the APC-7 inner conductor.

* Swept frequency measurements can be made over somewhat wider frequency ranges than indicated by the FREQ RANGE (GHz) selector provided that the sweep reference voltages cover the required range as well.

** APC-7 is a registered trademark of Bunker-Ramo Corporation.

Replacement Figure 3-2. Model 8410C Rear Panel Features (2 of 2)

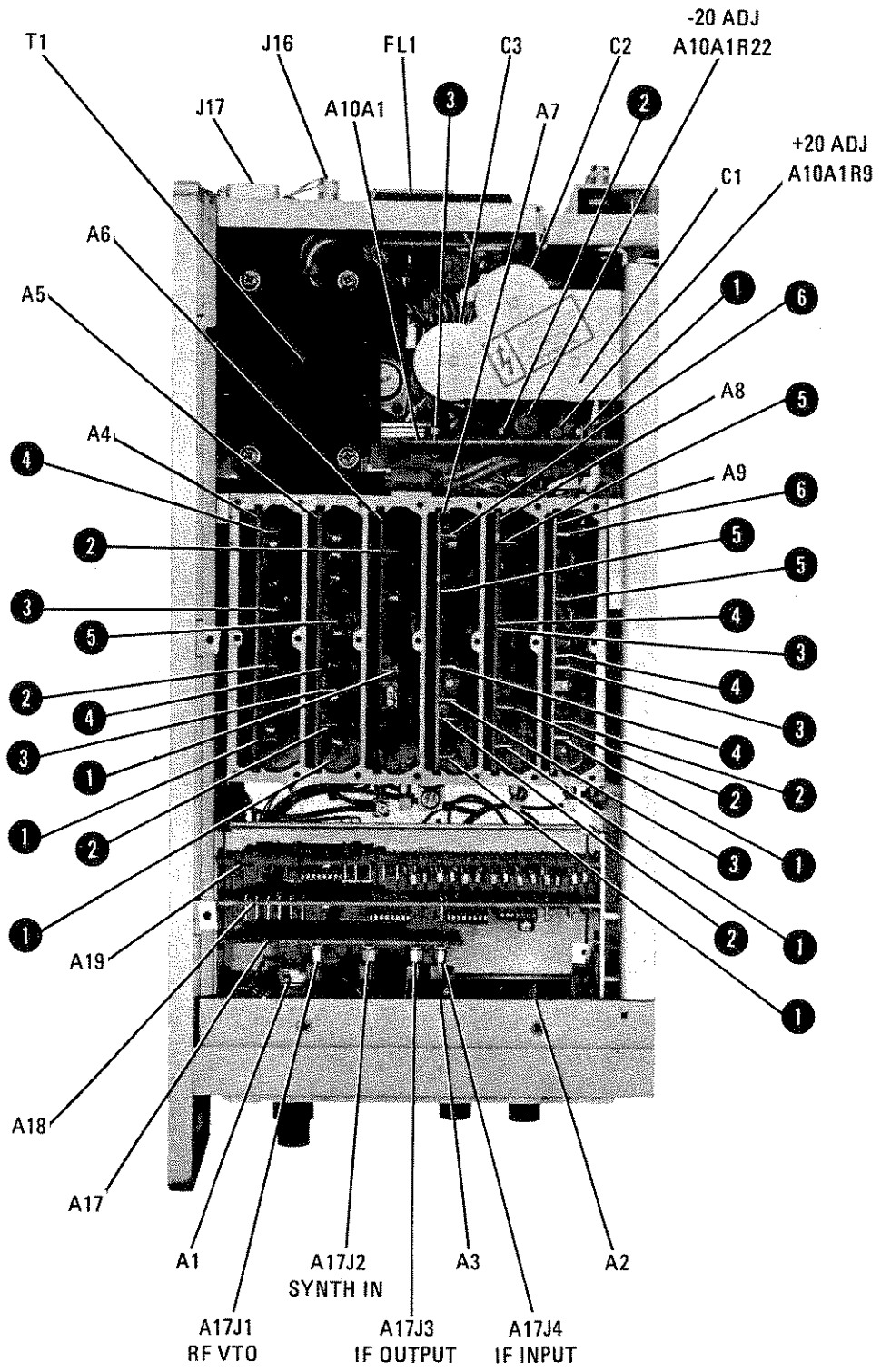

Replacement Figure 8-15. Model 8410C Test Points (1 of 2)

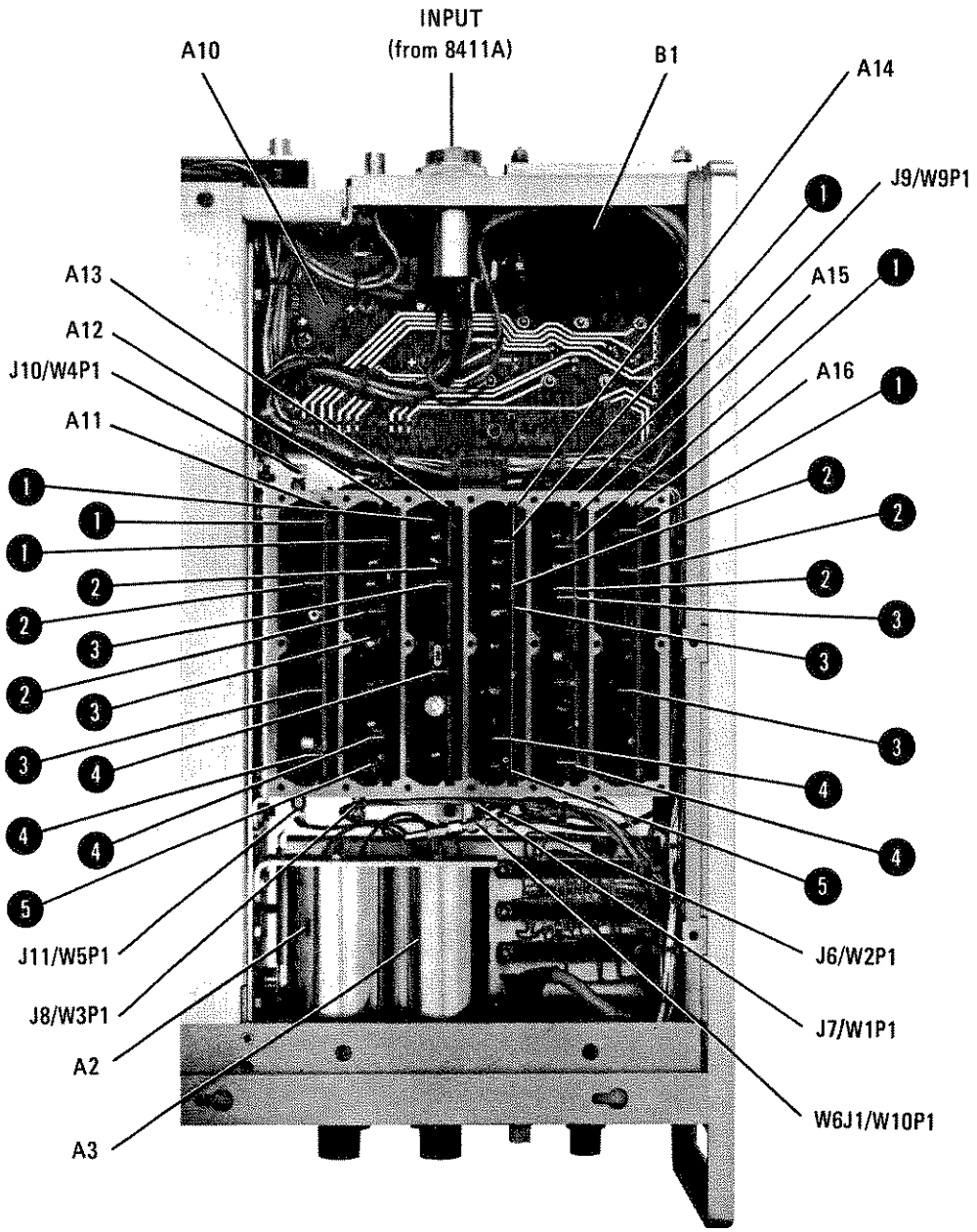

Replacement Figure 8-15. Model 8410C Test Points (2 of 2)